Actual Size: 100% when viewed on A4 paper
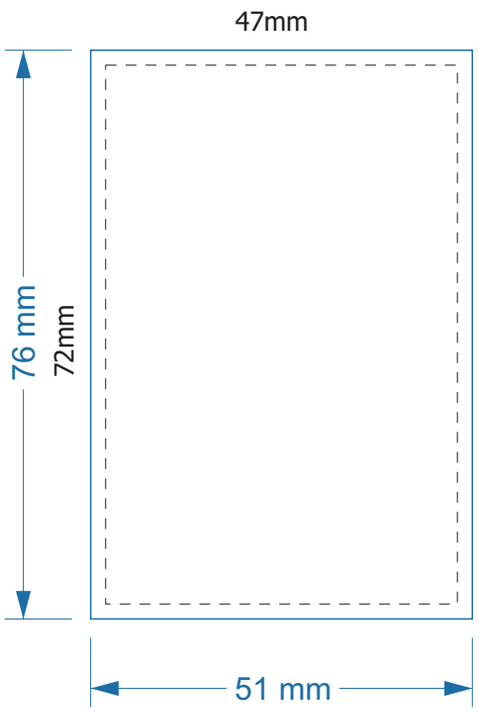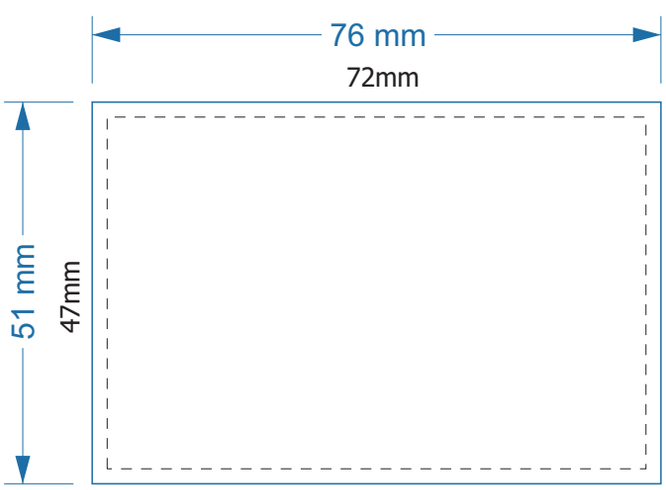
Digital Print